STAMPEDE 4X4
Chassis Assembly

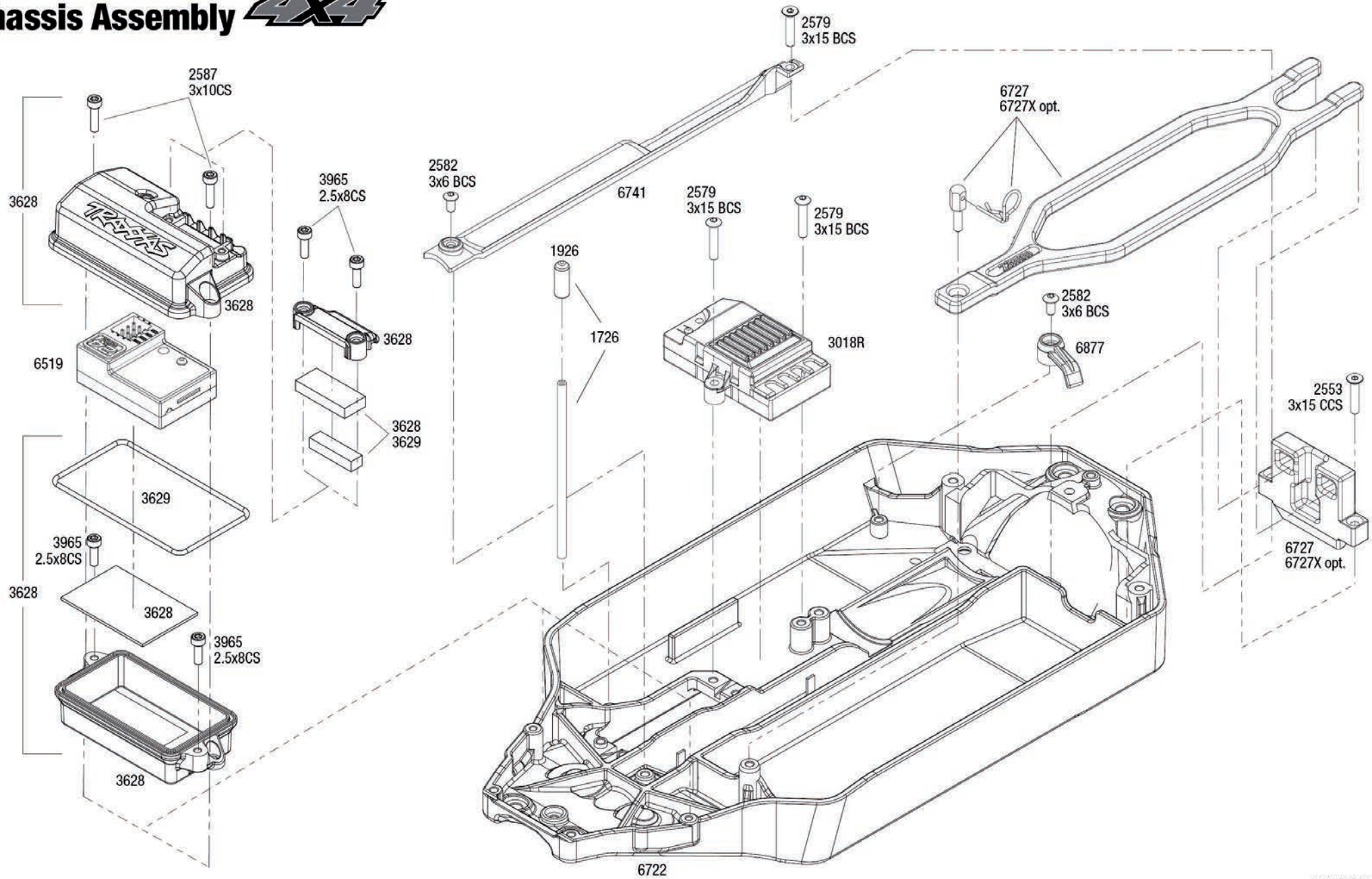

REV 191126-R01

Specifications on this page are subject to change without notice. Every attempt has been made to ensure the accuracy of this drawing; however, Traxxas cannot be held responsible for typographical or other errors.

See Parts List for a complete listing of optional accessories.

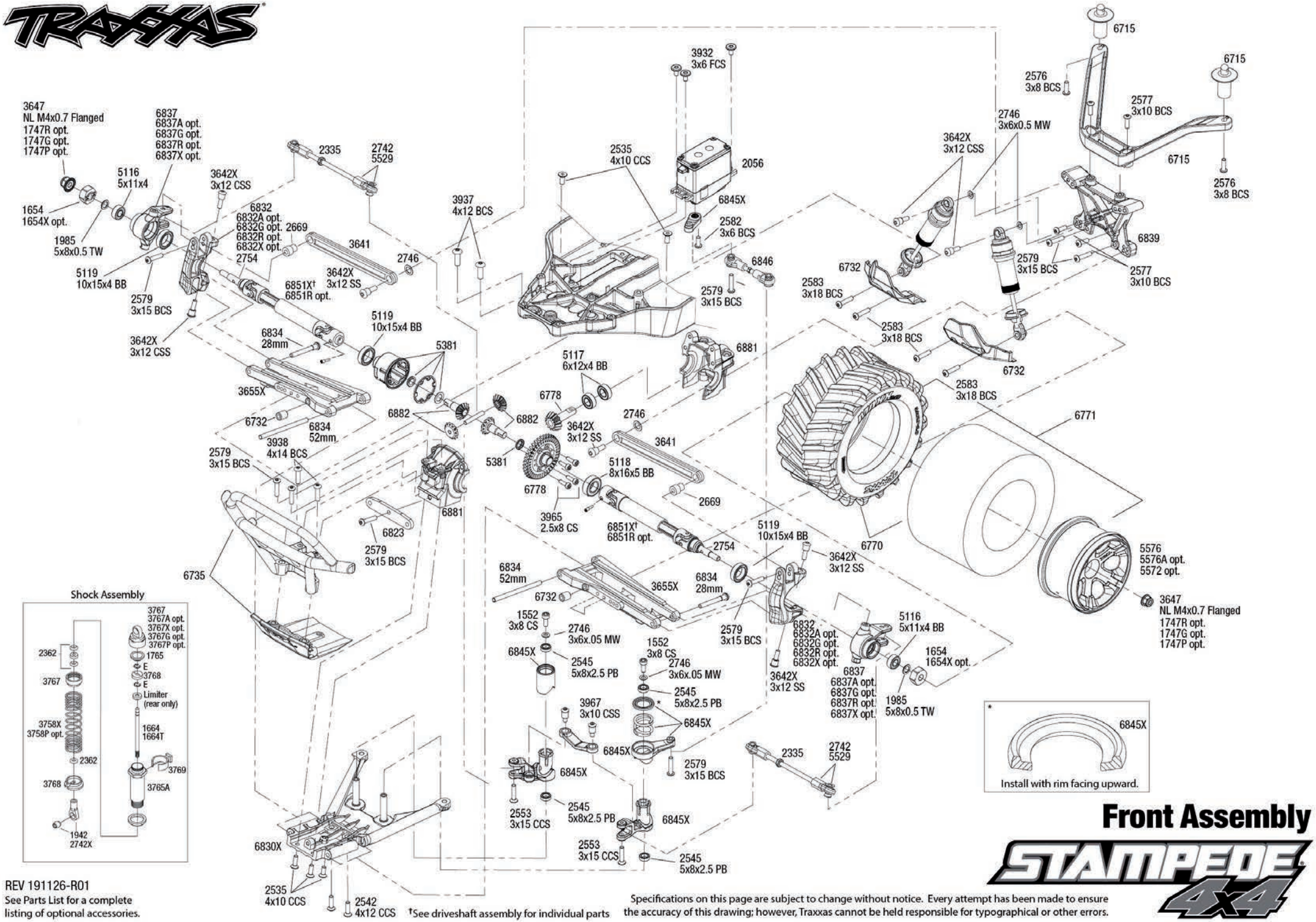

REV 191126-R01

See Parts List for a complete listing of optional accessories.

†See driveshaft assembly for individual parts

Specifications on this page are subject to change without notice. Every attempt has been made to ensure the accuracy of this drawing; however, Traxxas cannot be held responsible for typographical or other errors.

STAMPEDE 4X4
Rear Assembly

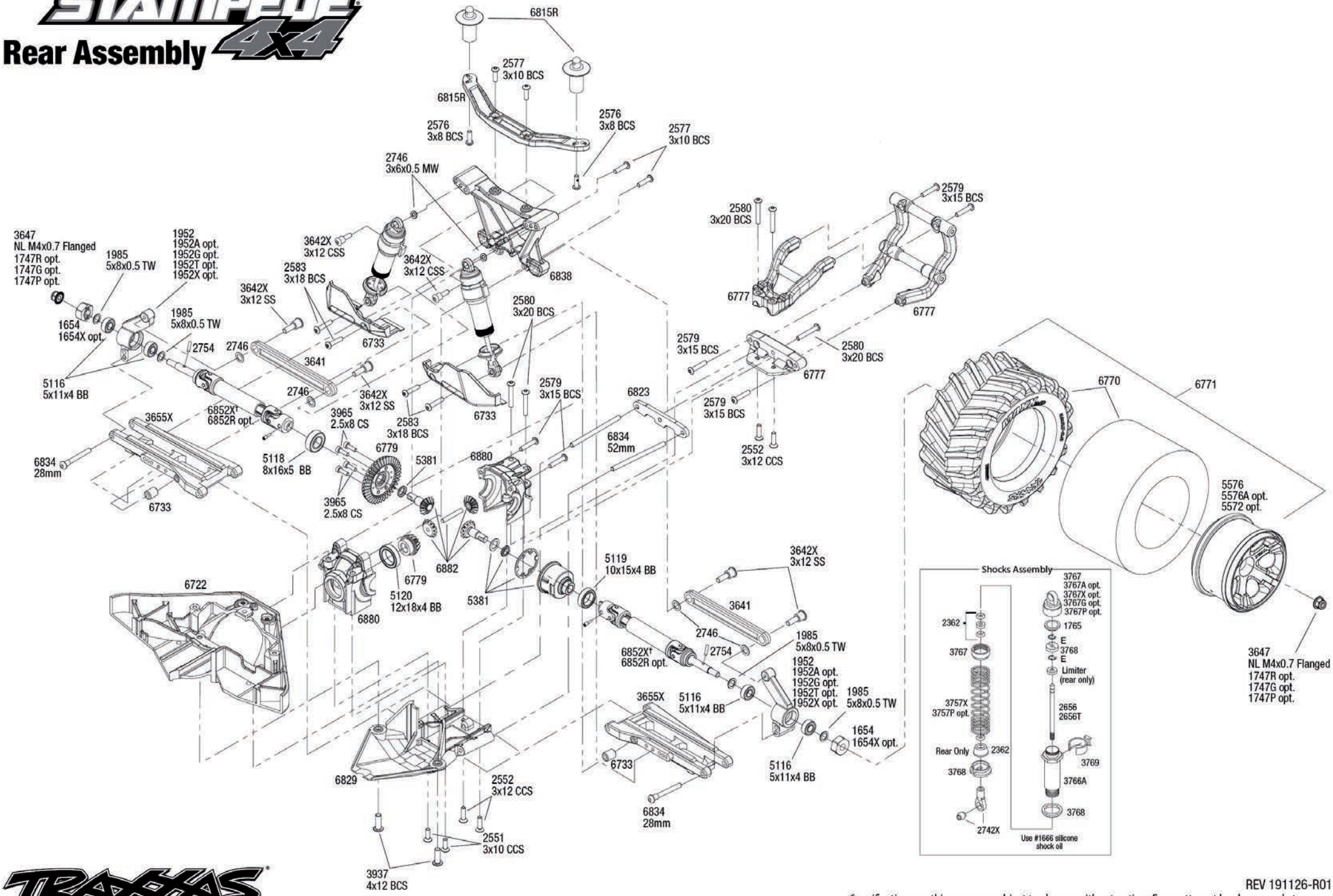

See Parts List for a complete listing of optional accessories.

REV 191126-R01

Specifications on this page are subject to change without notice. Every attempt has been made to ensure the accuracy of this drawing; however, Traxxas cannot be held responsible for typographical or other errors.

STAMPEDE 4X4

Center Driveline Assembly

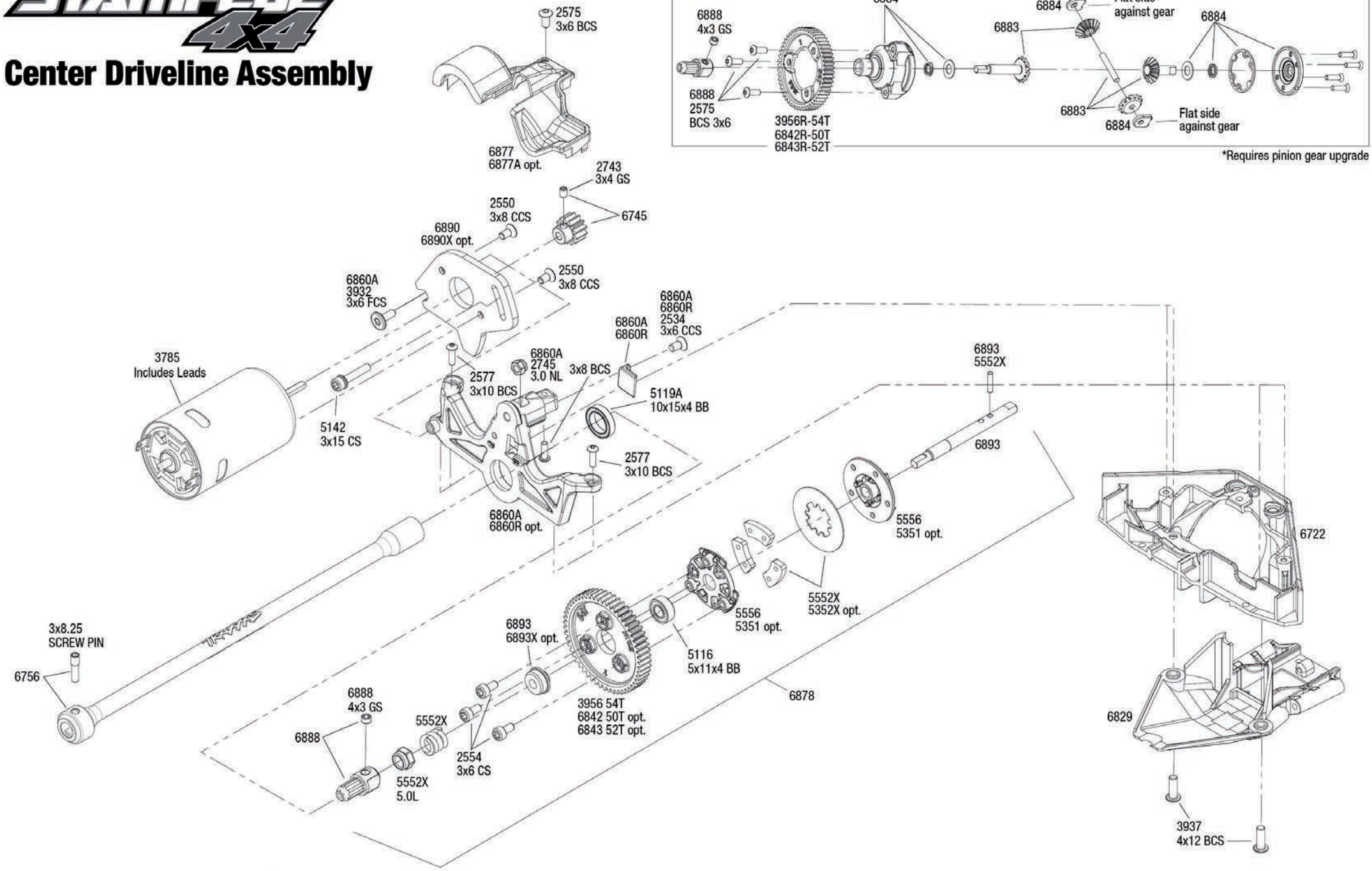

See Parts List for a complete listing of optional accessories.

Specifications on this page are subject to change without notice. Every attempt has been made to ensure the accuracy of this drawing; however, Traxxas cannot be held responsible for typographical or other errors.

REV 191126-R01

Driveshaft Assembly

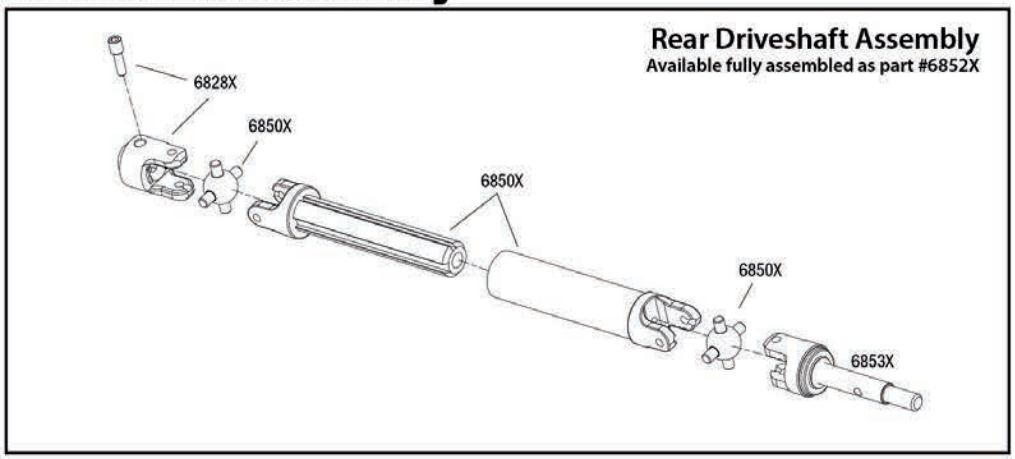

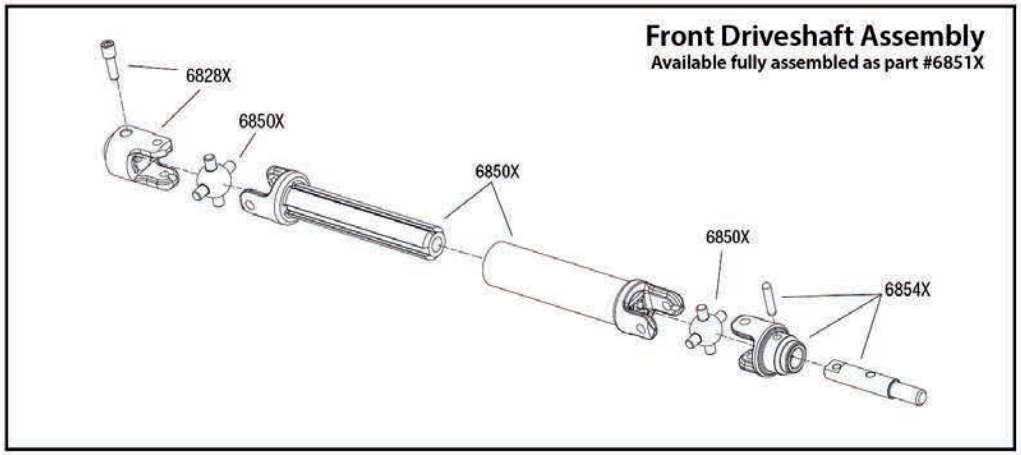

Modular Assembly

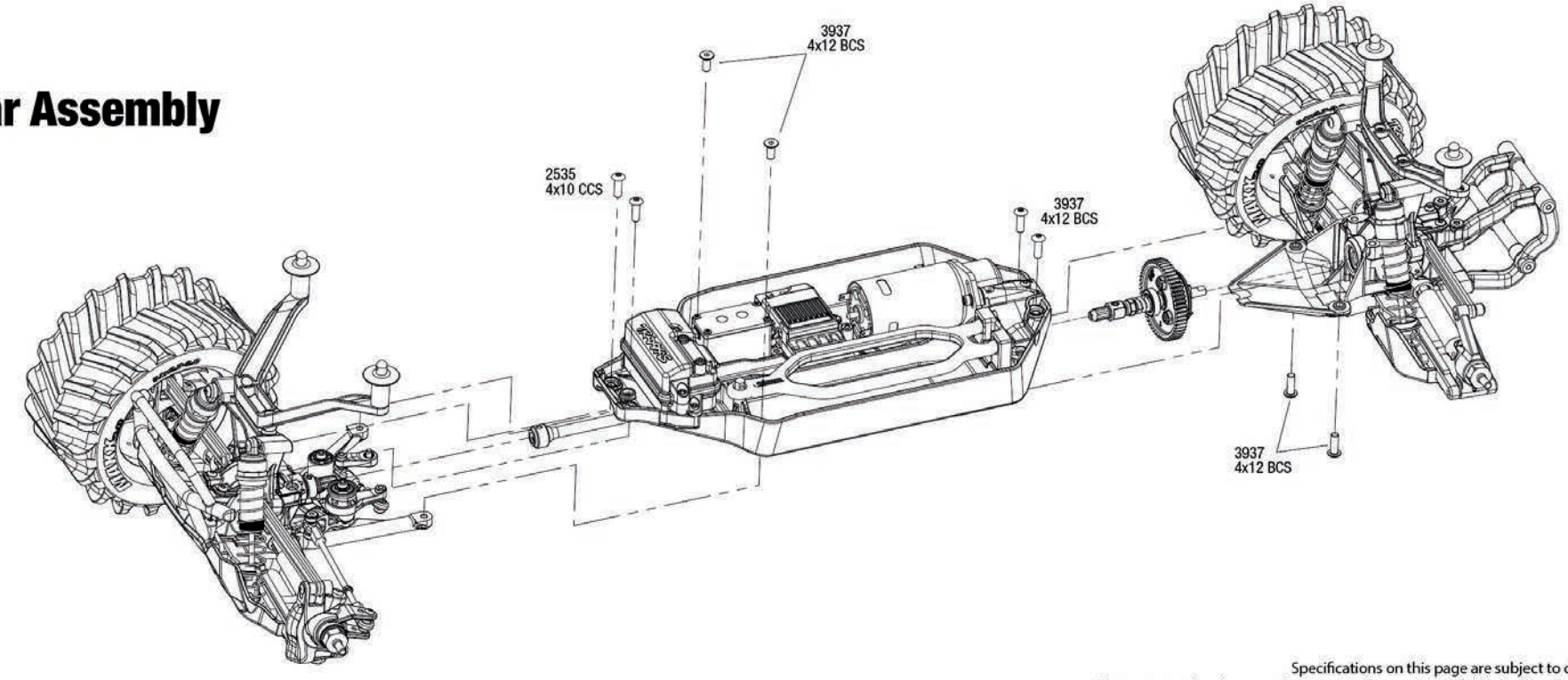

REV 191126-R01

Specifications on this page are subject to change without notice.
Every attempt has been made to ensure the accuracy of this drawing; however, Traxxas cannot be held responsible for typographical or other errors. See Parts List for a complete listing of optional accessories.