Center Driveline Assembly

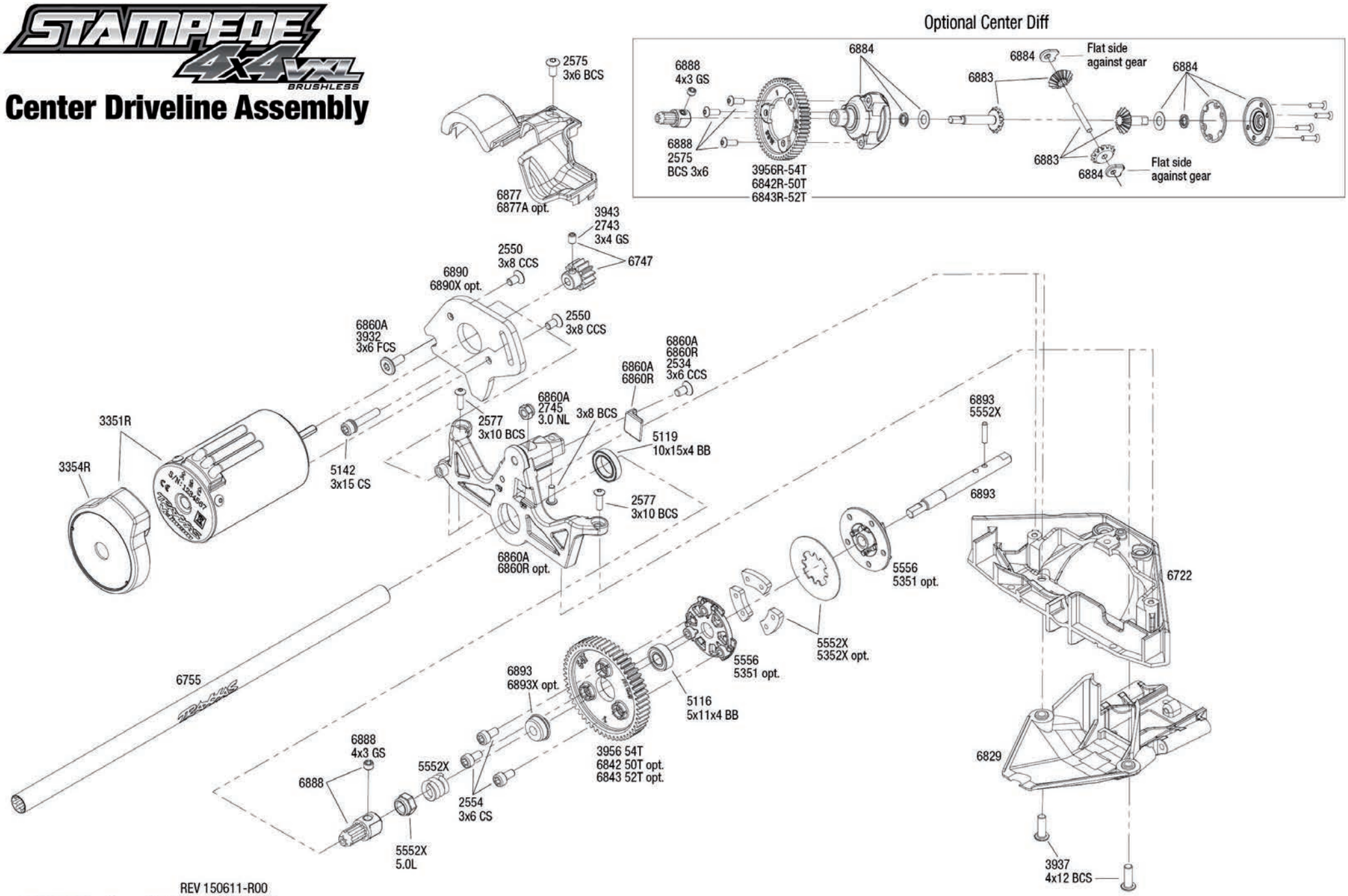

REV 150611-R00

See Parts List for a complete listing of optional accessories.

Specifications on this page are subject to change without notice. Every attempt has been made to ensure the accuracy of this drawing, however Traxxas cannot be held responsible for typographical or other errors.

STAMPEDE 4X4 VXL BRUSHLESS
Rear Assembly

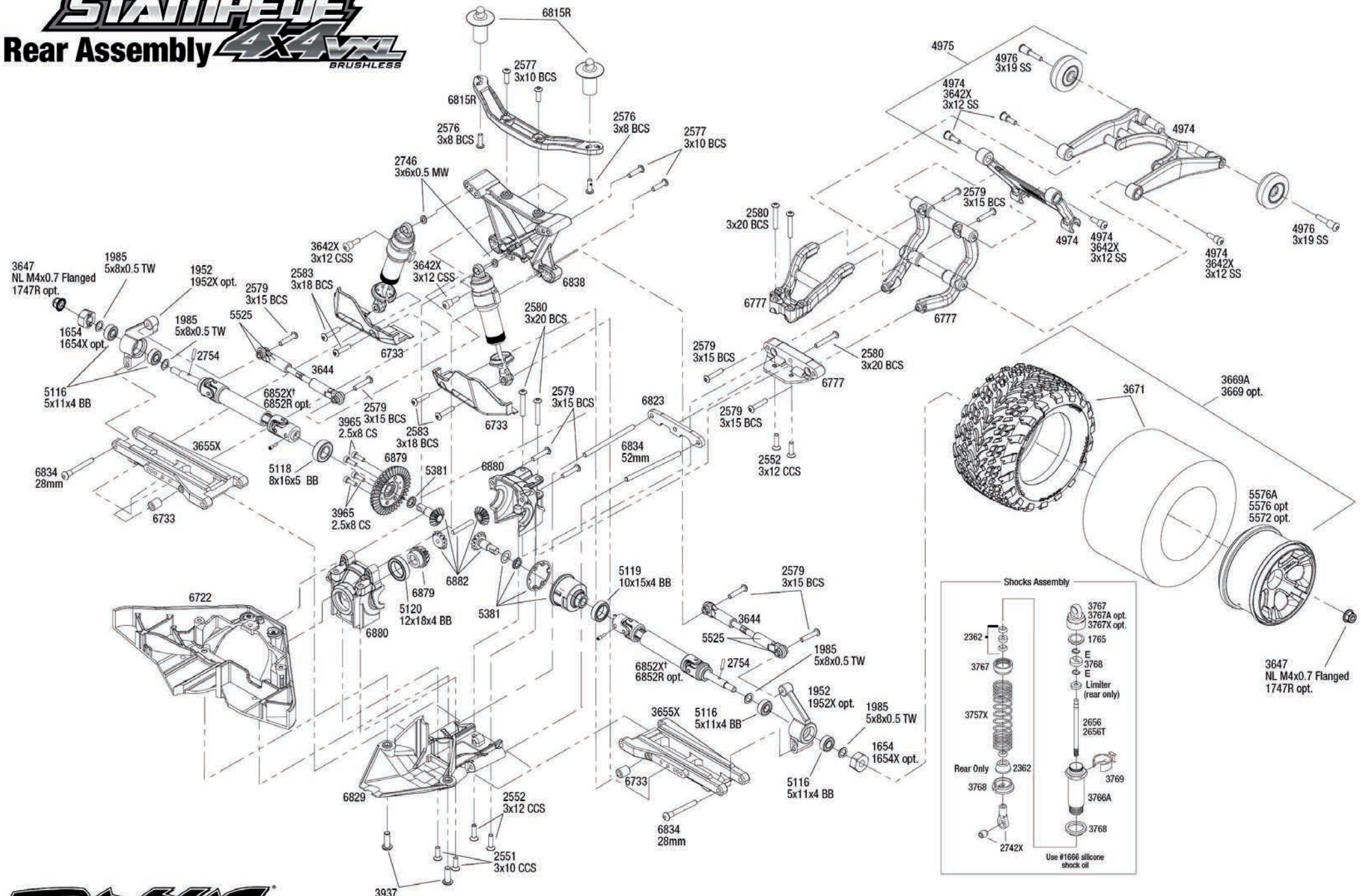

See Parts List for a complete listing of optional accessories.

REV 150611-R00

Specifications on this page are subject to change without notice. Every attempt has been made to ensure the accuracy of this drawing, however Traxxas cannot be held responsible for typographical or other errors.

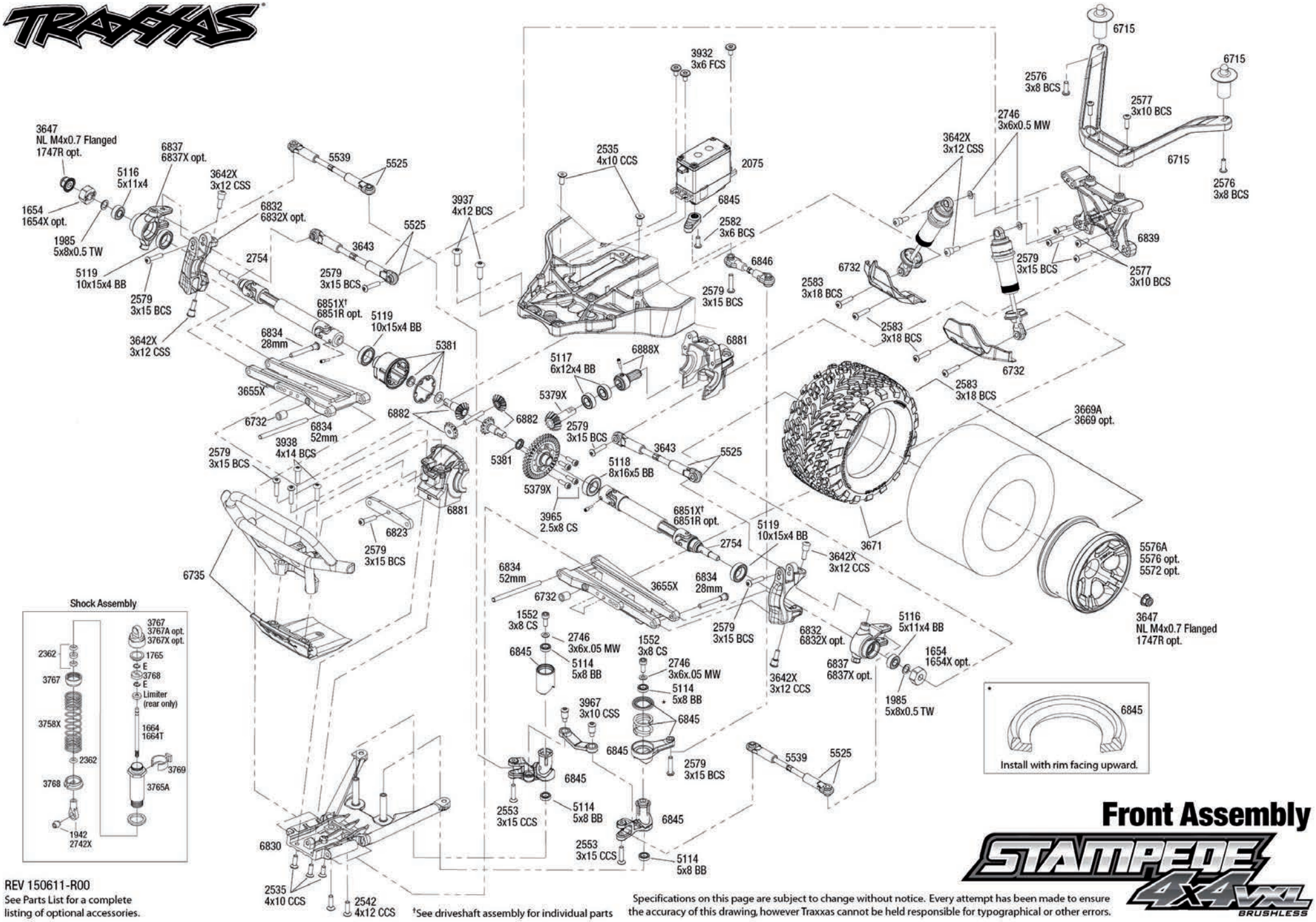

Front Assembly

STAMPEDE 4X4 VXL BRUSHLESS

REV 150611-R00

See Parts List for a complete listing of optional accessories.

†See driveshaft assembly for individual parts

Specifications on this page are subject to change without notice. Every attempt has been made to ensure the accuracy of this drawing, however Traxxas cannot be held responsible for typographical or other errors.

Driveshaft Assembly

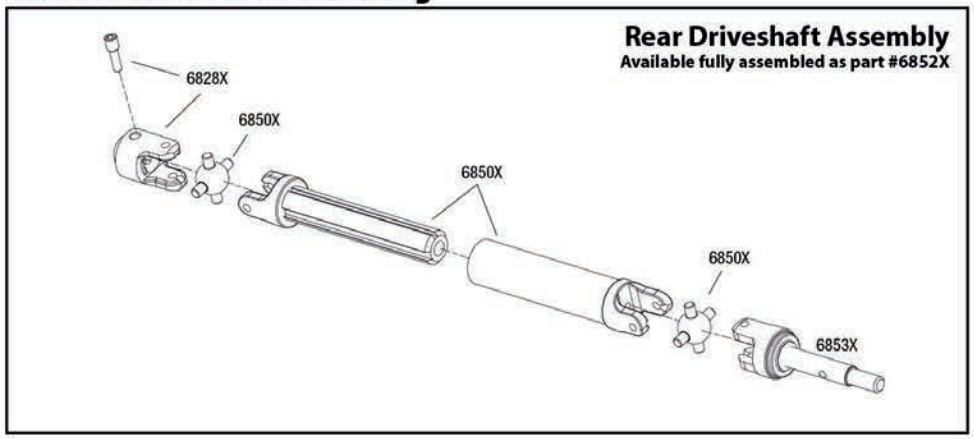

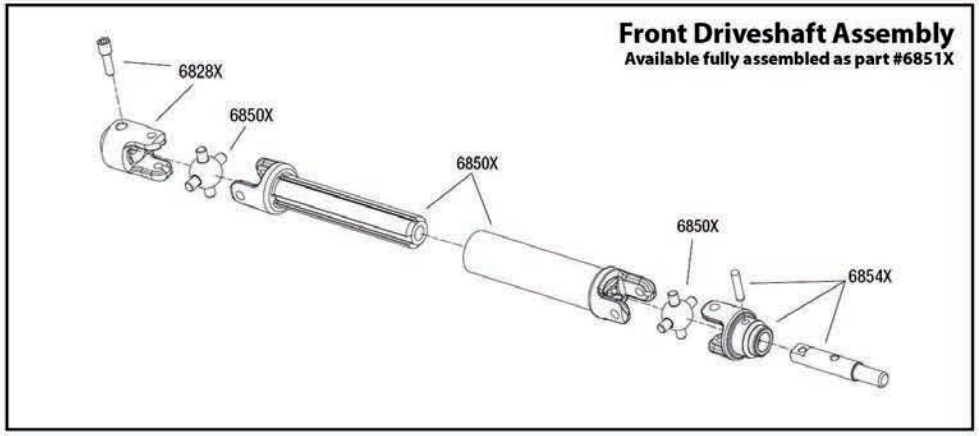

Modular Assembly

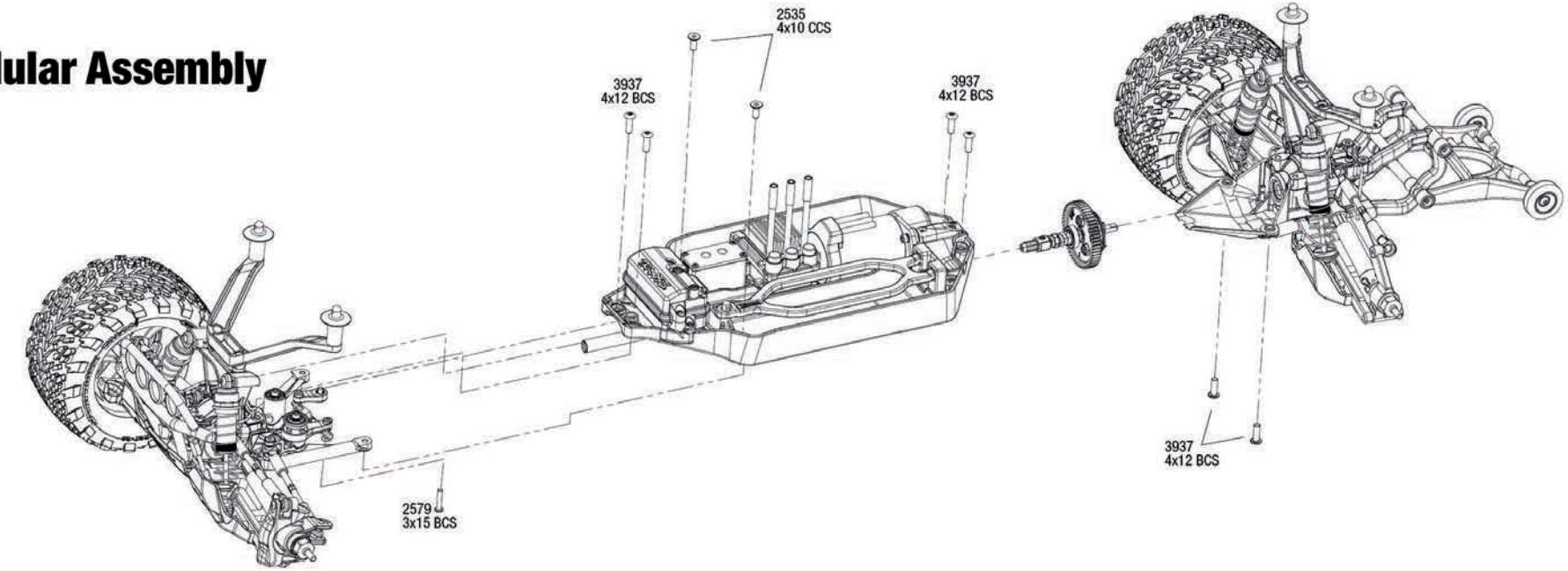

REV 150611-R00

Specifications on this page are subject to change without notice.
Every attempt has been made to ensure the accuracy of this drawing, however Traxxas cannot be held responsible for typographical or other errors. See Parts List for a complete listing of optional accessories.

STAMPEDE 4X4 VXL BRUSHLESS
Chassis Assembly

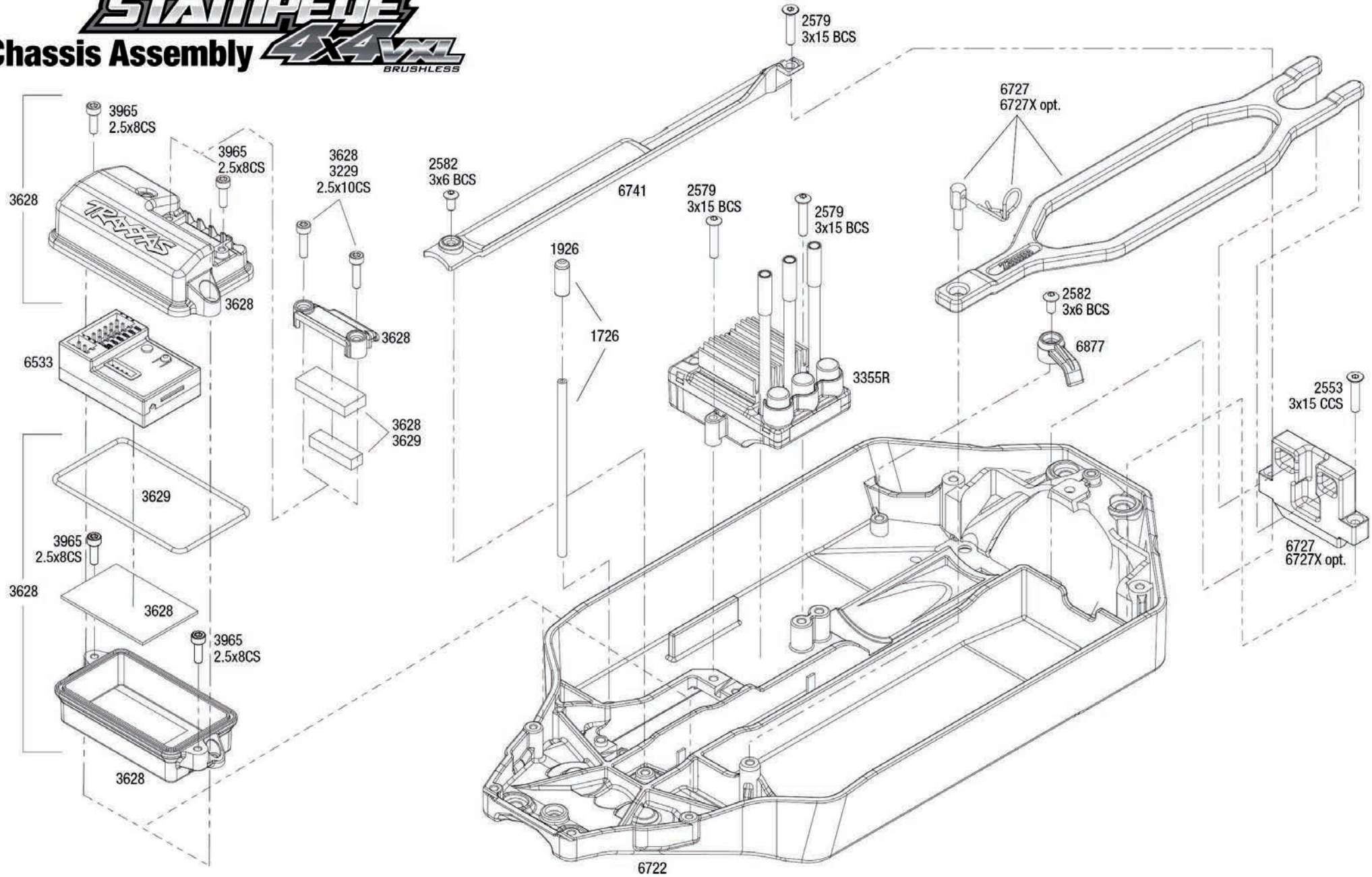

REV 150611-R00

Specifications on this page are subject to change without notice. Every attempt has been made to ensure the accuracy of this drawing, however Traxxas cannot be held responsible for typographical or other errors.

See Parts List for a complete listing of optional accessories.